VPX
(OpenVPX)

TR D2x/msd

N - Series

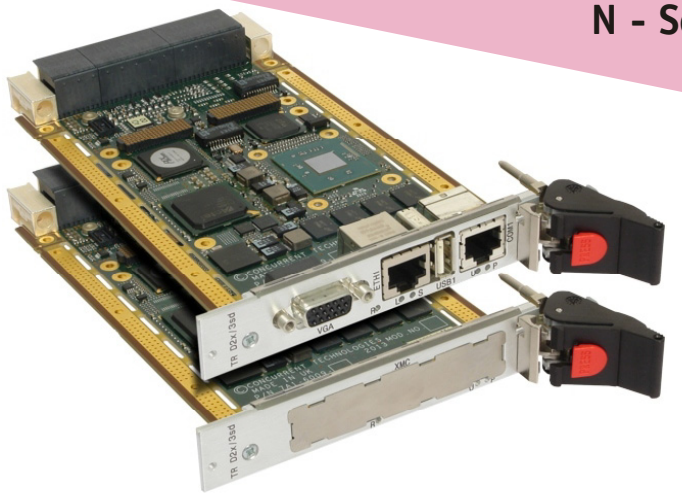

Intel® Atom™ Processor Single Board Computer

VPX
VPX REDI
OpenVPX

APPLICATIONS

The TR D2x/msd is a PC-compatible high performance 3U VPX processor board supporting the Intel® Atom™ processor E3800 product family with 4 Gbytes of DDR3L ECC DRAM. The TR D2x/msd features an optional XMC site and a range of I/O interfaces including two SATA300 channels, dual 1000Base-BX or dual 10/100/1000 Mbps Ethernet interfaces, serial and USB interfaces. The board provides a flexible PCI Express® (Gen 1 and Gen 2) backplane fabric interface for use in systems defined by OpenVPX (VITA 65). For rugged applications, VPX-REDI Type 1 and VPX-REDI Type 2, conduction-cooled versions are supported. The board is suitable for a range of applications within industrial control, transport, aerospace, security and defense applications. To simplify integration many standard operating systems are supported.

HIGHLIGHTS

- 3U VPX (VITA 46.0) N-Series single board computer:
  - air-cooled
  - 0°C to +55°C operating temperature
  - use in commercial (non-rugged) applications
  - 3U VPX 0.8 inch slot or 1.0 inch slot
  - optional rear transition module available
- I/O interfaces compatible with several OpenVPX profiles
- Compatible with the FR 331/x06 VPX Switch
- Rear plug compatible with the popular TR A40/x0x or TR 90x/x1x families
- Intel® Atom™ processor E3800 product family:
  - 4-core 1.91 GHz (10W) Intel Atom processor E3845
  - 1-core 1.46 GHz (5W) Intel Atom processor E3815
- 4 Gbytes DDR3L DRAM with ECC
- Optional Fastboot solution using the Intel® Firmware Support Package (Intel® FSP)
- Configurable PCI Express® (PCIe) VITA 46.4 data plane fabric interface:
  - 8 x1 PCIe ports, 2 x4 PCIe ports, 1 x4 + 4 x1 PCIe ports
  - support for Gen 1 and Gen 2
  - compatible with OpenVPX module profiles
  - supports one Non-Transparent Bridge (NTB) port
- Configurable VITA 46.6 control plane fabric interface:
  - 2 x SerDes (1000Base-BX) ports or 1 x SerDes plus 1 x Gigabit Ethernet ports or 2 x Gigabit Ethernet ports
- 10/100/1000 Ethernet port (option for front or rear)
- 2 x SATA300 mass storage interface plus support for optional on-board SATA Flash Drive Module
- 3 x serial interfaces
- 2 x USB 2.0 plus optional USB 3.0/2.0 interfaces
- Watchdog and long duration timers
- IPMI (Intelligent Platform Management Interface)
- Optional XMC module interface or fixed front panel I/O:
  - XMC module interface (x4 PCI Express Gen 2) or
  - 1 x USB, 1 x RS232, 1 x Gigabit Ethernet, 1 x VGA
- Optional graphics (DVI-D ,VGA) and stereo audio
- Optional High Speed CANbus controller interface
- Optional support for Built-In Test (BIT)
- Optional support for board-level security package e.g. TPM
- Optional software tools for the PCIe fabric interface
- Ruggedized conduction-cooled VPX-REDI versions (RCx-Series)
- Support for Linux®, Windows® and VxWorks®

CONCURRENT TECHNOLOGIES

Concurrent Technologies Plc 4 Gilberd Court, Colchester, Essex, CO4 9WN, UK
Tel: +44 (0)1206 752626 Fax: +44 (0)1206 751116

Concurrent Technologies Inc 6 Tower Office Park, Woburn, MA 01801, USA
Tel: (781) 933 5900 Fax: (781) 933 5911

email: info@gocct.com **http://www.gocct.com**

powerBridge Computer

Ehlbeek 15a
30938 Burgwedel
fon 05139-9980-0
fax 05139-9980-49

www.powerbridge.de
info@powerbridge.de

VPX Single Board Computer

- air-cooled 3U VPX SBC (N-Series) utilizing the Intel® Atom™ processor E3800 product family
- optional rear transition module
- compatible with several OpenVPX module profile
- factory build options for rear I/O compatibility with TR A40/x0x or TR 90x/x1x: see table opposite
- compatible with FR 331/x06 PCI Express® Switch
- ruggedized conduction-cooled (VITA 48.2) VPX-REDI (RCx-Series) versions:
  - ➔ see TR D2x/3sd-RCx datasheet

Central Processor

- Intel® Atom™ processor E3800 product family:
  - ➔ 4-core 1.91 GHz (10W) Intel Atom processor E3845
  - ➔ 1-core 1.46 GHz (5W) Intel Atom processor E3815

DRAM

- 4 Gbytes soldered DDR3L ECC DRAM:
  - ➔ peak bandwidth of 10.6 Gbytes/s
  - ➔ single channel architecture
- accessible from processor or VPX fabric

XMC Interface (build option)

- 1 x XMC site, in a single VPX slot (VITA 42.0):
  - ➔ XMC (Switched Mezzanine Card) interface supported by x4 PCI Express® Gen 2 (VITA 42.3)
  - ➔ front panel I/O aperture
  - ➔ +5V or +12V VPWR (build option)
- front panel build option does not support XMC site

Front Panel I/O (build option)

- front panel I/O build option (no XMC site) supports:
  - ➔ 1 x 10/100/1000Mbps Ethernet (not TR D2x/msd)
  - ➔ 1 x RS232 channel accessed via RJ45, full modem support (16550 compatible)
  - ➔ 1 x USB2.0 interface
  - ➔ 1 x VGA, user switchable via front panel or via P2
- only available with the air-cooled boards (N-Series)

Graphics Interface

- implemented by CPU
- DVI-D (factory build), via P2:
  - ➔ resolutions up to 1920 x 1080 @ 60 Hz
- VGA (factory build), user switchable via front or P2:
  - ➔ resolutions up to 2048 x 1536 @ 75 Hz
- support for Microsoft® DirectX 11.1 on Windows®
- support for OpenGL 3.0 on Linux®

Mass Storage Interfaces

- 2 x SATA300 interfaces via P1 connector
- optional SATA Flash Module, 8 Gbytes minimum

Serial Interfaces

- 1 x RS232/422/485 COM channel accessed via P1:
  - ➔ supporting Tx/Rx, CTS/RTS in RS232 only
  - ➔ supporting Transmit Control in RS485 mode
- 1 x RS232/422/485 COM channel accessed via P2:
  - ➔ supporting CTS, RTS, DSR, DTR, DCD and RI
- 16550 compatible UARTs

Optional Built-In Test (BIT) Support

- Power-on BIT (PBIT), Initiated BIT (IBIT), Continuous BIT (CBIT)

Optional Board Security Packages

- Trusted Platform Module (TPM)
- proprietary board-level security features

VPX Control Plane Ethernet Interfaces

- build option for 2 x 1000 Mbps IEEE802.3z SerDes (1000Base-BX) ports via P1:
  - ➔ software switch option for 1 x SerDes port and 1 x 10/100/1000 Mbps Ethernet port
- alternative factory build options for 2 x 10/100/1000 Mbps Ethernet ports
- build options for on-board Ethernet magnetics

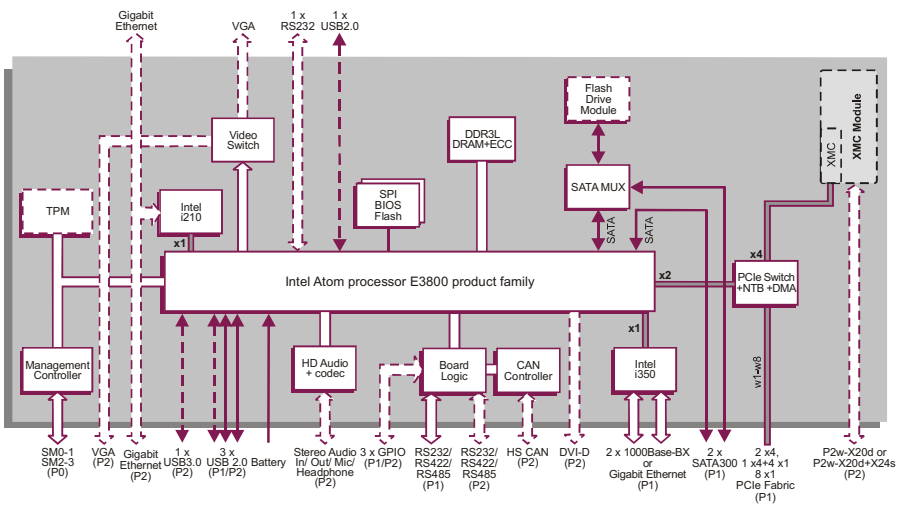

TR D2x/msd I/O Options

TR D2x/msd	Ethernet		Serial COM			USB			Graphics		HD Audio (CoDec)		CAN	SATA	GPIO	XMC
Build Option	2x GigE or 2x 1000 Base-Bx	1x GigE	A	B	C	2x 2.0	1x 2.0	1x 3.0	DVI-D	VGA	In/Out/ Mic	Head Phone	HS-CAN	2x	3x	I/O
TR A40/x03																
Front I/O (no XMC)	-	✓	-	-	✓	-	✓	-	-	✓	-	-	-	-	-	with XMC aperture &
Rear I/O	P1	-	P1	P2	-	P1	-	-	P2	-	P2	-	P2	P1	P2	X20d
TR 90x/x1x																
Front I/O (no XMC)	-	✓	-	-	✓	-	✓	-	-	✓	-	-	-	-	-	with XMC aperture &
Rear I/O	P1	-	P1	-	-	P1	-	-	-	or P2	-	-	-	P1	P1/P2	X20d+X24s
TR D2x/msd																
Front I/O (no XMC)	-	-	-	-	✓	-	✓	-	-	✓	-	-	-	-	-	with XMC aperture &
Rear I/O	P1	P2	P1	-	-	P1	P2	P2	-	or P2	P2	P2	-	P1	P1/P2	X20d

VPX Data Plane PCI Express Interface

- P0, P1 and P2 support OpenVPX configuration
- configurable PCI Express® (PCIe) fabric interface:
  - ➔ 8 x1 PCIe ports, 2 x4 PCIe ports, 1 x4 + 4 x1 PCIe ports
  - ➔ support for Gen 1 and Gen 2
  - ➔ supports one Non-Transparent Bridge (NTB) port for multi-processing configurations
- 4 channel DMA engine for fast data block moves
- supported by VPX switch configuration tool
- supported by Fabric Interconnect Networking software (FIN-S)

Other Peripheral Interfaces

- PC Real Time Clock
- long duration timer; watchdog timer
- up to 3x USB2.0 ports plus an optional USB3.0/2.0
- 3 x GPIO signals
- optional stereo audio including onboard codec
- optional High Speed CANbus controller interface
- CPU temperature monitor; voltages monitor; accessed via System Management interface

System Management

- IPMI Version 1.5 via SM0-1 and SM2-3
- on-board BMC (Baseboard Management Controller)
- supports 8 Kbytes of non-volatile memory

Software Support

- support for Linux®, Windows® and VxWorks®

Firmware Support

- Insyde Software InsydeH20™ BIOS
- optional Fastboot solution using the Intel® Firmware Support Package (Intel® FSP)
- Intel® Platform Innovation Framework for EFI
- LAN boot firmware included

Non-Volatile Memory

- dual 8 Mbytes of BIOS SPI Flash EPROM
- 8 Kbytes user EEPROM

Electrical Specification

- typical current consumption (4-core Intel Atom processor E3845):
  - ➔ +5V @ 1.0A, voltage +5% / -2.5%
  - ➔ +3.3V @ 2.0A, voltage +5% / -2%
  - ➔ +3.3V AUX @ 0.3A, voltage +5% / -2%
- +12V AUX and -12V AUX routed to XMC site

Safety

- PCB (PWB) manufactured with flammability rating of 94V-0

Environmental Specification

- operating temperature (air-cooled):
  - ➔ VITA 47 Class AC1, 0°C to +55°C
- storage temperature:
  - ➔ VITA 47 Class C1, -40°C to +85°C
- operating altitude:
  - ➔ 0 to 15,000 feet (0 to 4,572 meters)
- relative humidity (operating/storage):
  - ➔ 5% to 95%, non condensing

Mechanical Specification

- 3U VPX form-factor (VITA 46.0, VITA 48.0)
- 3.9 inches x 6.3 inches (100mm x 160mm)
- optional slot widths:
  - ➔ 0.8-inch (VITA 46.0)
  - ➔ 1.0-inch (IEEE 1101.10 as per VITA 46.0)
  - ➔ 1.0-inch (VITA 48.0 as per VITA 65)
- connectors to VITA 46.0 for P0, P1 and P2
- operating mechanical:
  - ➔ shock - VITA 47 Class OS1, 20g
  - ➔ random vibration - 0.002g²/Hz

ORDERING INFORMATION

Order Number	Product Description (Hardware)
TR D2x/msd-yz	Next generation Intel Atom processor, N-Series where x = processor core selection where m = front panel width style where s = processor speed variant

For the order number suffix (d-yz) options please contact your local sales office:

d = DRAM size

yz = rear I/O configuration

For further information on the VPX (N-Series) and VPX-REDI (RCx-Series) boards please contact your local sales office.

All companies and product names are trademarks of their respective organizations.
Specification subject to change; E and OE. RoHS compliant.

Datasheet Code 1714/1013a
© Concurrent Technologies 2013